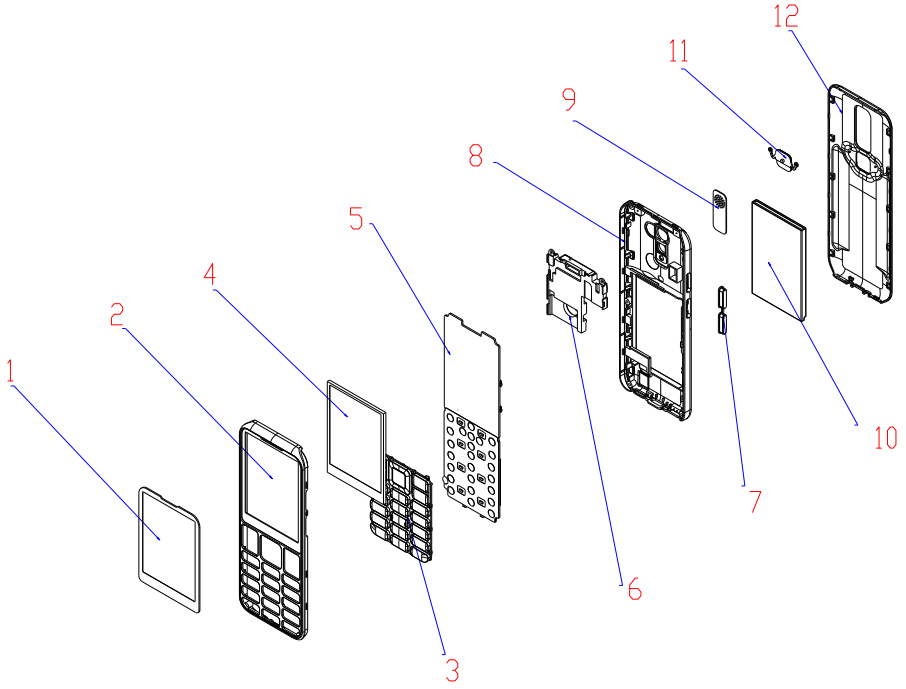

12		C shell	1	
11		key	1	
10		Battery	1	
9		Lens	1	
8		B shell	1	
7		key	1	
6		Loudspeaker	1	
5		Mainboard	1	
4		display	1	
3		key	1	
2		A shell	1	
1		lens	1	
S/N	CP	PN	Qty	RS

CL8600

CL8600 Service Part List			
Item	**Description**	**Unit**	**Price**
1	CL8600 E19 battery	1	Please contact our helpline
2	CL8600 rear-facing camera assembly	1	Please contact our helpline
3	CL8600 external charging port(s)	1	Please contact our helpline
4	CL8600 mechanical button(s)	1	Please contact our helpline
5	CL8600 main microphone(s)	1	Please contact our helpline
6	CL8600 speaker(s)	1	Please contact our helpline
7	CL8600 mechanical display folding mechanism	1	Please contact our helpline

REVISION RECORD			
LTR:	ECO NO:	APPROVED:	DATE:

PMU_ANALOG

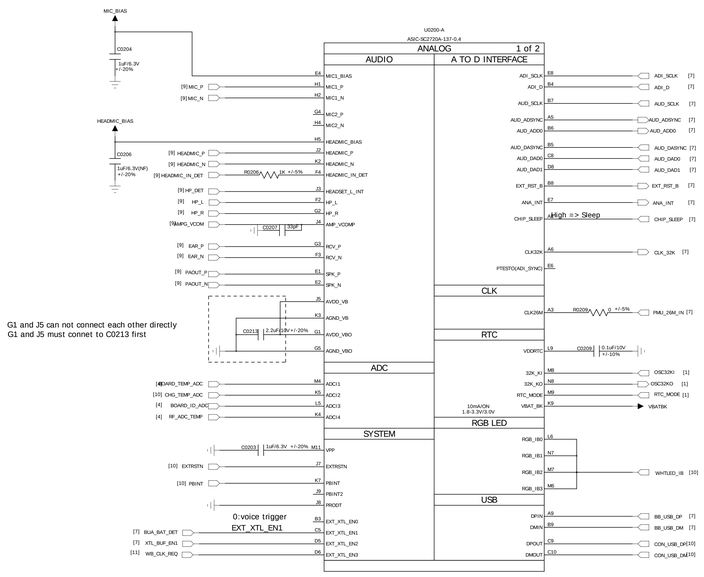

BKBT

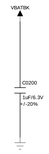

RTC

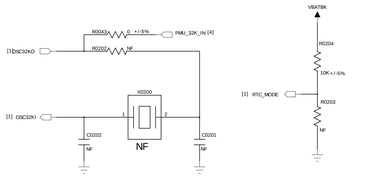

RTC mode select:1(32K-less);0(crystal)

RTC Mode	R0204	R0203	X0200	C0201	C0202	R0202	R0214	
32K Crystal	NF	0R	Crystal	8.2pF	8.2pF	0R	NF	
32K-less	10K	NF	NF	NF	NF	NF	0R	

COMPANY:	GEEMARC TELECOM				
TITLE:					
DRAWN:	DATED:				
CHECKED:	DATED:	CODE:	SIZE:	DRAWING NO:	REV:
QUALITY CONTROL:	DATED:				
RELEASED:	DATED:	SCALE:		SHEET: 1 OF 12	

REVISION RECORD			
LTR	ECO NO:	APPROVED:	DATE:

PMU_POWER

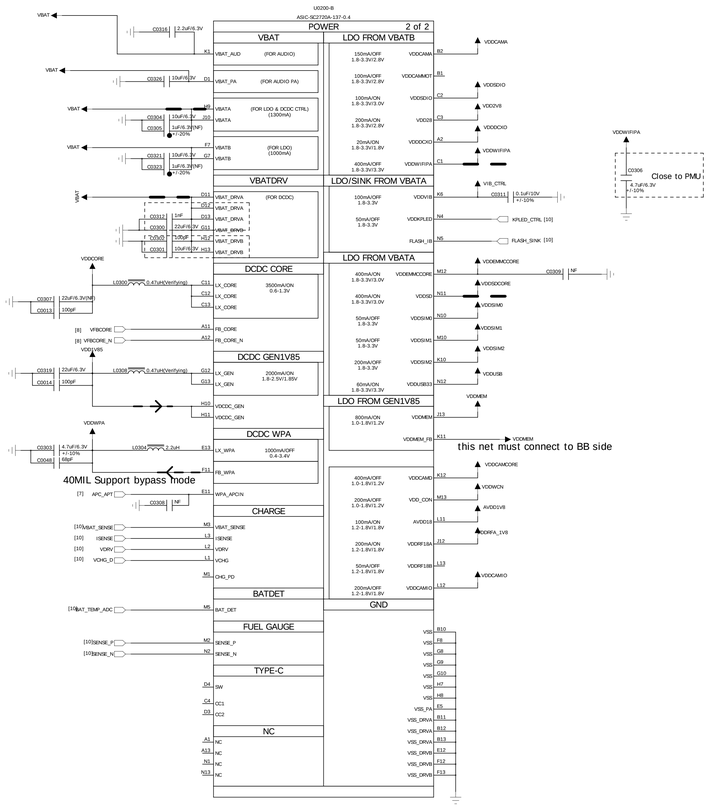

SC2720 DCDC output

Input Power	Power Name	Output Voltage (V)	Output Current	Default Voltage	Default
VBAT	DCDCCORE	0.4-1.4	3500mA	0.9V	ON
	DCDCGEN1V8	1.6-2.1	2000mA	1.85V	ON
	DCDCWPA	0.4-3.4 2x and 2.5x ramp	1000mA		OFF

SC2720 LDO output

Input Power	Power Name	Output Voltage (V)	Output Current	Default Voltage	Default
LDO from VBAT	VDDCAMA	1.8-3.3	150mA	2.8V	OFF
	VDDCAMMOT	1.8-3.3	100mA	2.8V	OFF
	VDDSIM0	1.8-3.3	50mA		OFF
	VDDSIM1	1.8-3.3	50mA		OFF
	VDDSIM2	1.8-3.3	200mA		OFF
	VDDEMMCCORE	1.8-3.3	400mA	3.0V	ON
	VDDSD	1.8-3.3	400mA	3.0V	ON
	VDDSDIO	1.8-3.3	400mA	3.0V	ON
	VDD28	1.8-3.3	100mA	2.8V	ON
	VBATBK	1.8-3.3	10mA	3.0V	ON
	VDDVIB	1.8-3.3	100mA		OFF
	VDDKPLED	1.8-3.3	50mA		OFF
	VDDWIFIPA	1.8-3.3	400mA	3.3V	OFF
	VDDDCXO	1.8-3.3	20mA	1.8V	ON
	VDDUSB33	1.8-3.3	60mA	3.3V	ON
LDO from DCDCGEN	VDD_MEM	1.0-1.8	800mA	1.2V	ON
	VDDCAMD	1.0-1.8	400mA	1.25V	OFF
	VDDRFB	1.2-1.8	50mA	1.8V	OFF
	VDD_CON	1.0-1.8	200mA	1.2V	OFF
	VDDCAMIO	1.2-1.8	200mA	1.8V	OFF
	AVDD18	1.2-1.8	100mA	1.8V	ON
	VDDRFA	1.2-1.8	200mA	1.8V	ON

		COMPANY:	GEEMARC TELECOM		
		TITLE:			
DRAWN:	DATED:				
CHECKED:	DATED:	CODE:	SIZE:	DRAWING NO:	REV:
QUALITY CONTROL:	DATED:				
RELEASED:	DATED:	SCALE:		SHEET: 2 OF 12	

SPI FLASH(Default)

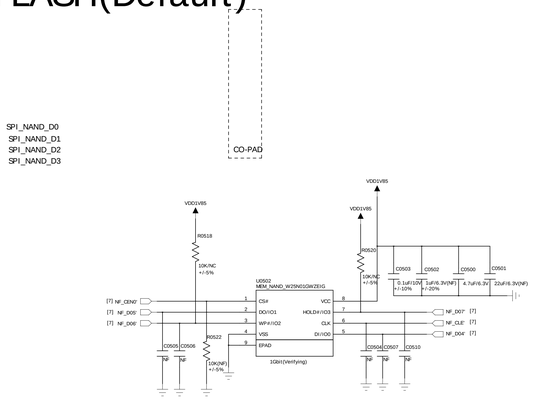

GD5F1GQ4RE9IGR AND W25N01GWZEIG

REVISION RECORD			
LTR:	ECO NO:	APPROVED:	DATE:

DRAWN:	DATED:	COMPANY: GEEMARC TELECOM			
CHECKED:	DATED:	TITLE:			
QUALITY CONTROL:	DATED:	CODE:	SIZE:	DRAWING NO:	REV:
RELEASED:	DATED:	SCALE:		SHEET: 3 OF 12	

REVISION RECORD			
LTR:	ECO NO:	APPROVED:	DATE:

LTE/WCDMA PAM

PA Part

Ipp=0.7A

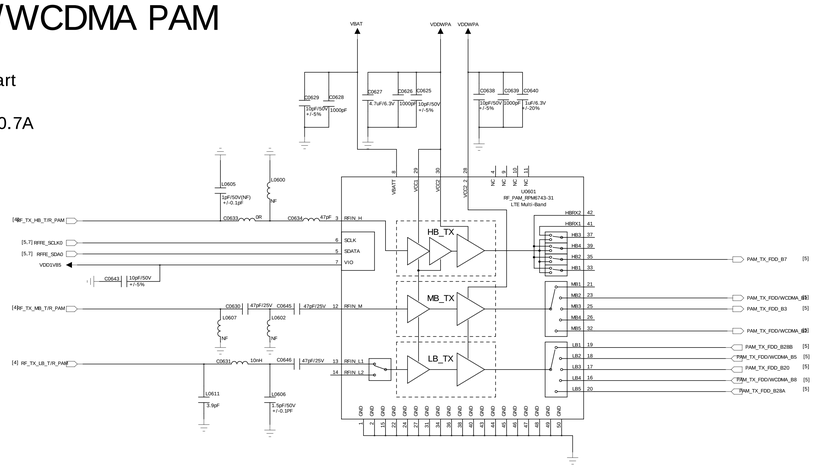

NTC

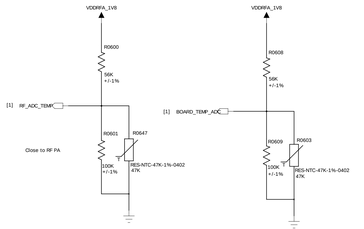

Band info

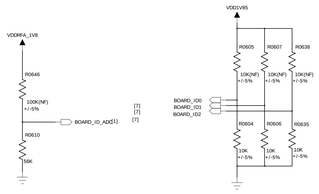

DCXO default for SC2332B

TSX backup for SC2342B

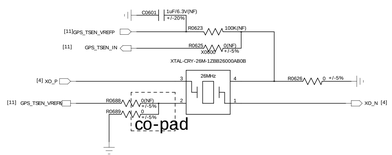

SC2332B&DCXO VS SC2342B&TSX and BoardID0

Type	X0600	R0623	R0625	R0626	R0688	R0689	R0605	R0604
DCXO Solution for SC2332B	DCXO	NF	NF	0R	NF	0R	NF	10K
TSX Solution for SC2342B	TSX	100K	0R	NF	0R	NF	10K	NF

Transceiver

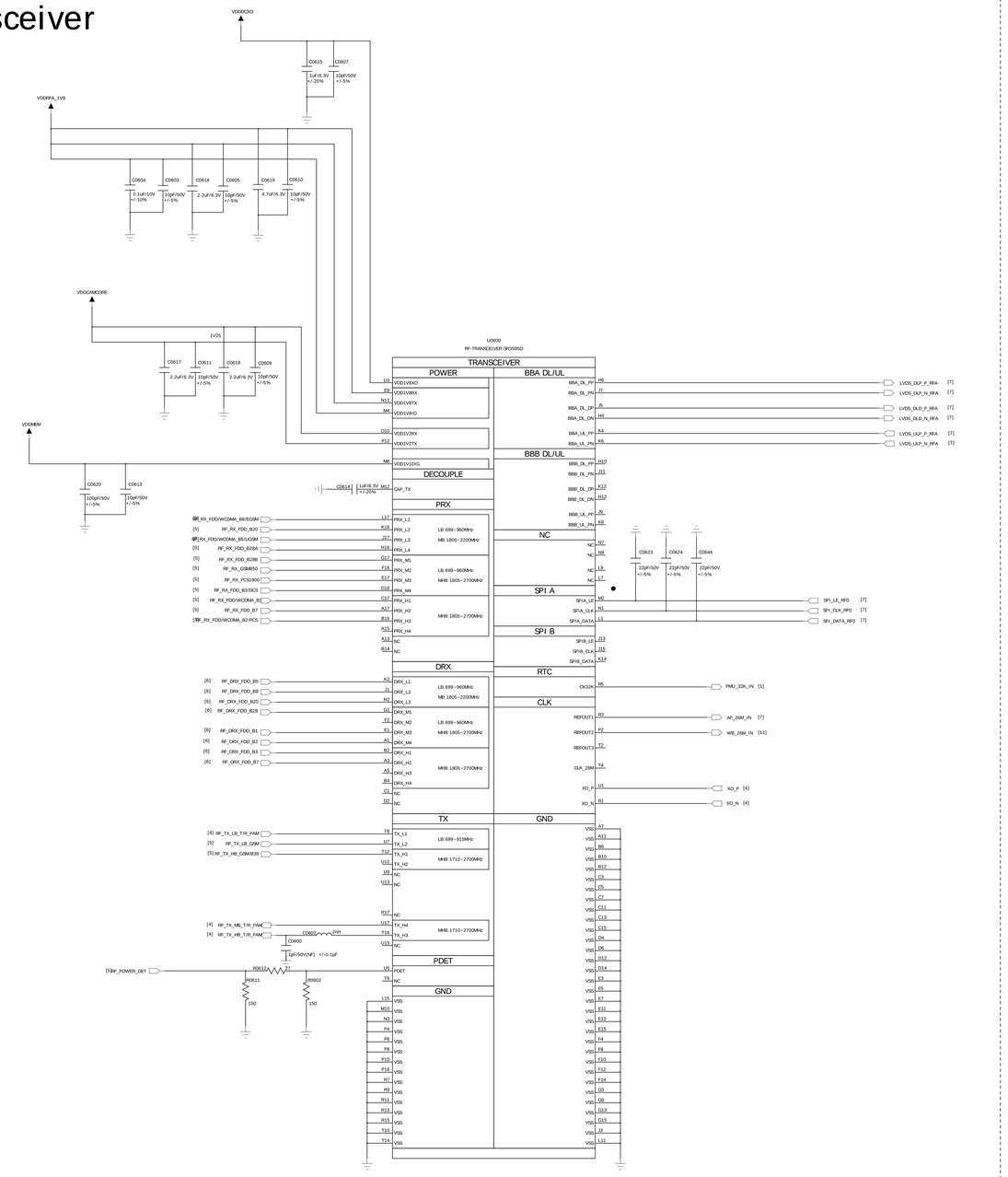

COMPANY:	GEEMARC TELECOM
TITLE:	

DRAWN:	DATED:	CODE:	SIZE:	DRAWING NO:	REV:
CHECKED:	DATED:				
QUALITY CONTROL:	DATED:				
RELEASED:	DATED:	SCALE:		SHEET: 4 OF 12	

REVISION RECORD			
LTR:	ECO NO:	APPROVED:	DATE:

Primary Antenna

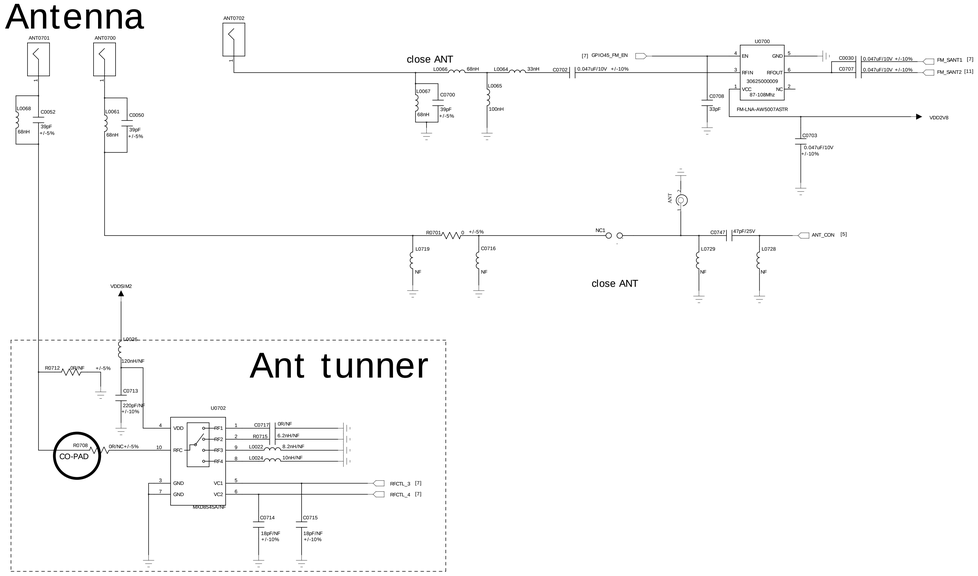

TDD B34/B39/GSM PA + Switch

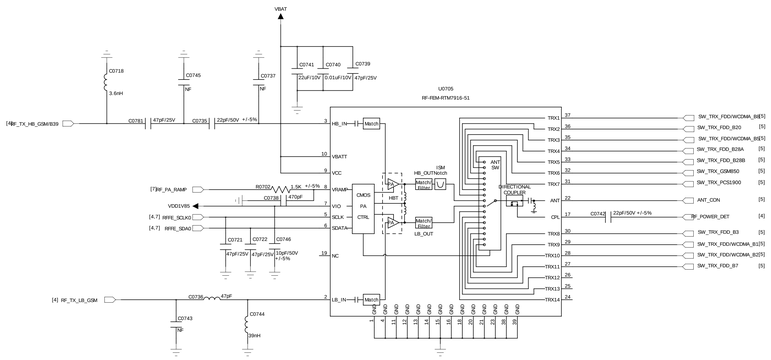

PCS1900

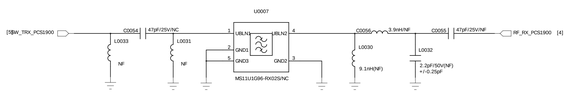

GSM850

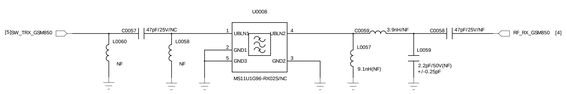

FDDLTE/WCDMA_B1

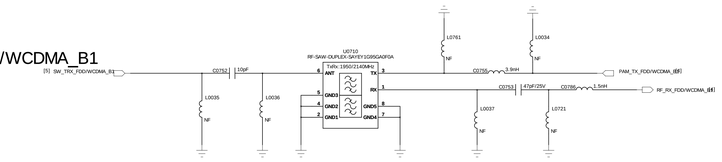

FDDLTE/WCDMA_B2

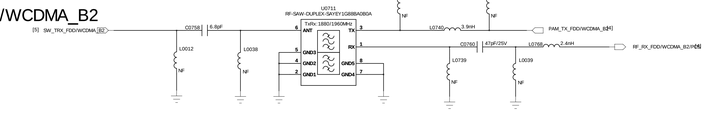

FDDLTE_B3

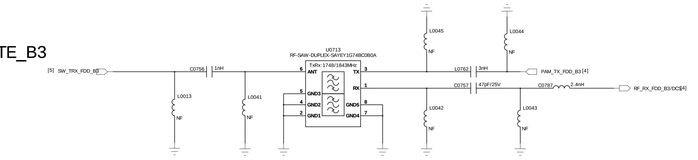

FDDLTE/WCDMA_B5

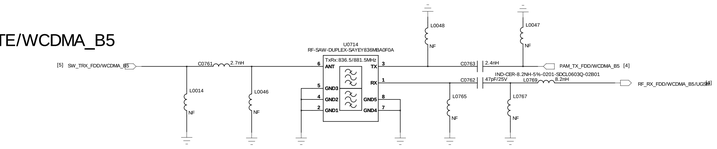

FDDLTE_B7

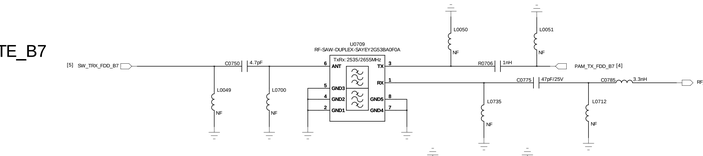

FDDLTE/WCDMA_B8

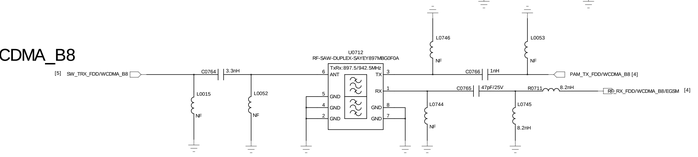

FDD_B20

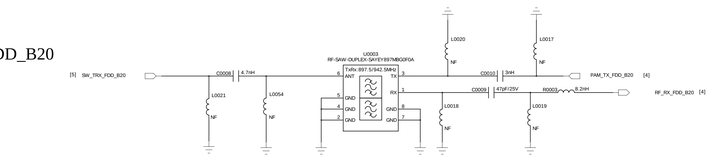

FDD_B28B

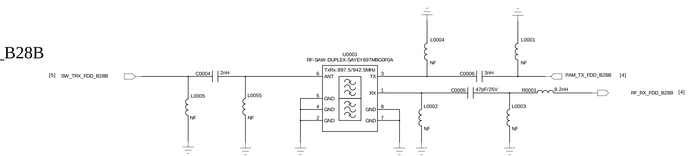

FDD_B28A

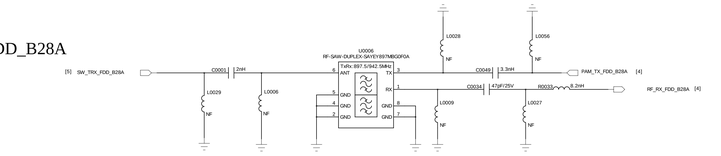

COMPANY:	GEEMARC TELECOM				
TITLE:					
DRAWN:	DATED:				
CHECKED:	DATED:	CODE:	SIZE:	DRAWING NO:	REV:
QUALITY CONTROL:	DATED:				
RELEASED:	DATED:	SCALE:		SHEET: 5 OF 12	

REVISION RECORD			
LTR:	ECO NO:	APPROVED:	DATE:

Diversity LTE Path

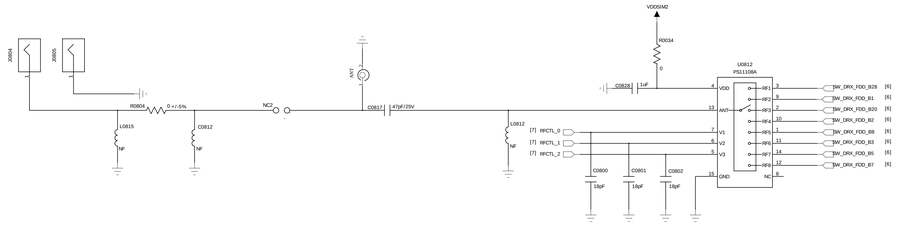

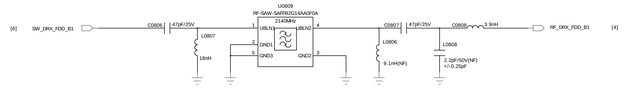

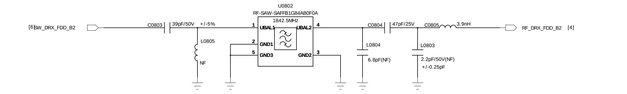

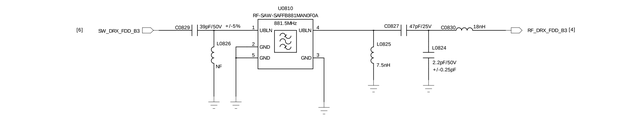

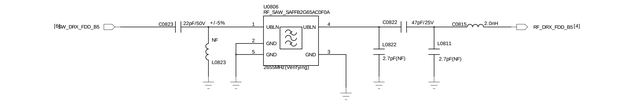

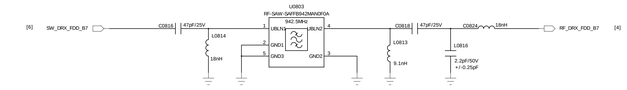

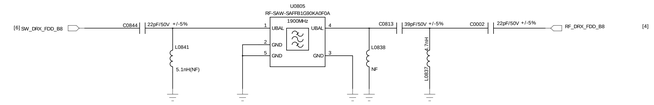

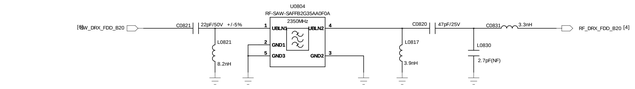

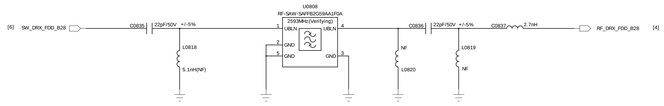

DRAWN:	DATED:
CHECKED:	DATED:
QUALITY CONTROL:	DATED:
RELEASED:	DATED:

COMPANY: **GEEMARC TELECOM**

TITLE:

CODE:	SIZE:	DRAWING NO:	REV:

SCALE: SHEET: 6 OF 12

REVISION RECORD			
LTR	ECO NO:	APPROVED:	DATE:

DIGITAL

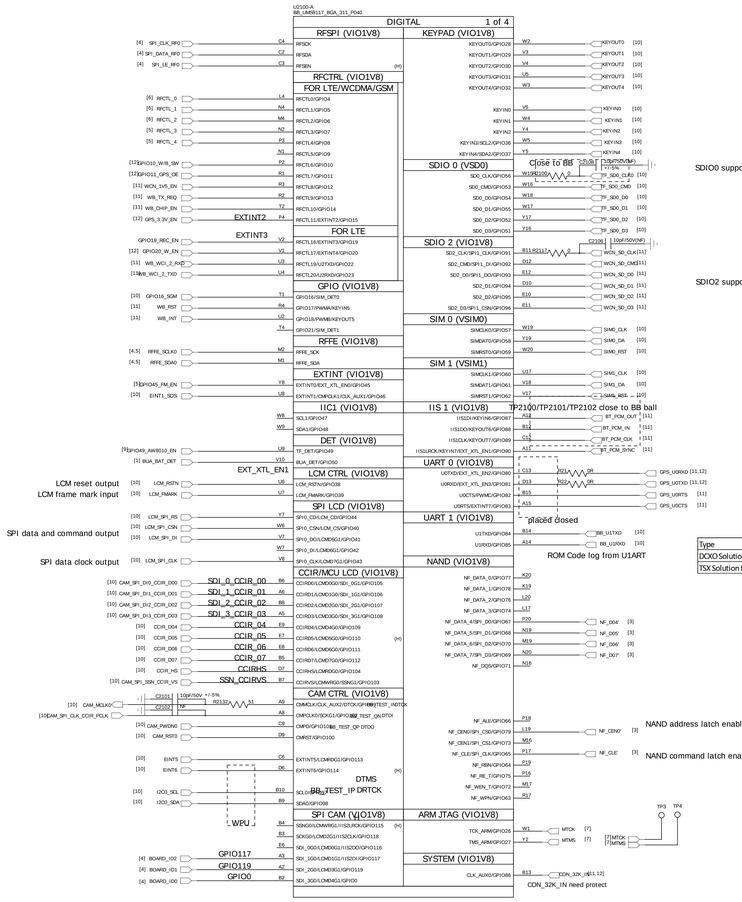

SDIO0 support SDIO3.0 4bit 208MHz with 1V8 and 3V

SDIO2 support SDIO3.0 4bit 208MHz with 1V8 only

BB strapping pin

Ball name	Signal name in boot code	Value	Descriptions	Default vale
U1TXD	USB_DLOAD_EN	0	USB download(no time out)	1(ie=1,wpu)
		1	UART download	
AUD_DAD1	ARM_BOOT_MD0	00	**00: Reserved**	11(MSB:md1, LSB:md0)
		01	**01: SD boot(master, no time out)**	
AUD_DAD0	ARM_BOOT_MD1	10	**10: SLC SPI NAND Flash**	
		11	**11: SLC Parallel NAND Flash**	
ADI_SCLK	ARM_BOOT_MD2	0	**USB download, if EUT get 3 "7E" from PC through USB within timeout period.**	1(ie=1,wpu)
		1	**Normal Boot Flow**	
PTEST	PTEST_FUNC_MODE	0	Normal mode	0
		1	Product Test Mode	

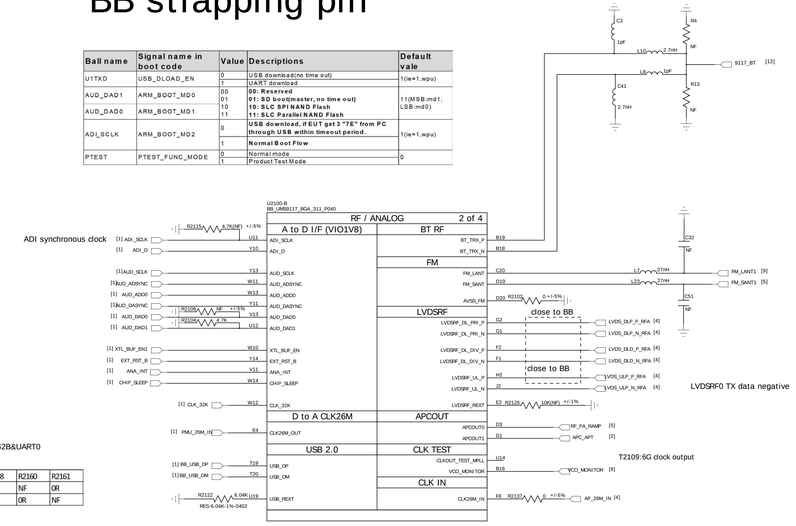

SC2332B&debugbus VS SC2342B&UART0

Type	R2156	R2140	R2157	R2141	R2159	R2158	R2160	R2161
DCXO Solution for SC2332B	NF	0R	NF	0R	NF	0R	NF	0R
TSX Solution for SC2342B	0R	NF	0R	NF	0R	NF	0R	NF

DRAWN:	DATED:	COMPANY: GEEMARC TELECOM	
CHECKED:	DATED:	TITLE:	
QUALITY CONTROL:	DATED:	CODE: / SIZE: / DRAWING NO:	REV:
RELEASED:	DATED:	SCALE:	SHEET: 7 OF 12

REVISION RECORD			
LTR:	ECO NO:	APPROVED:	DATE:

POWER

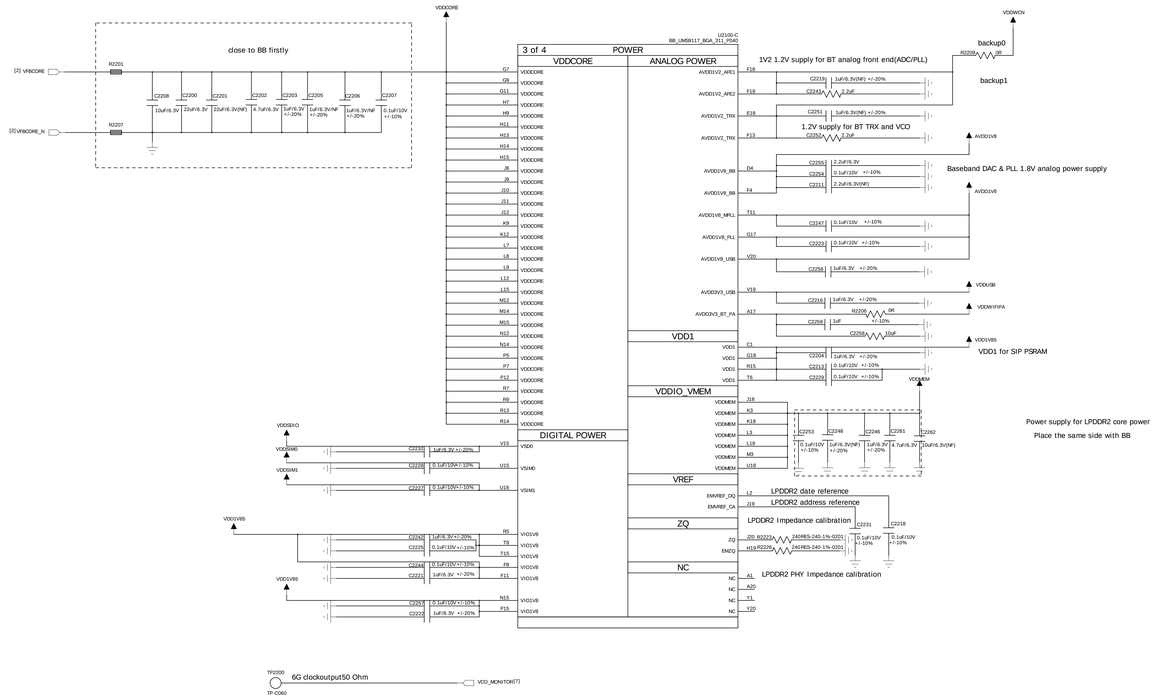

GND

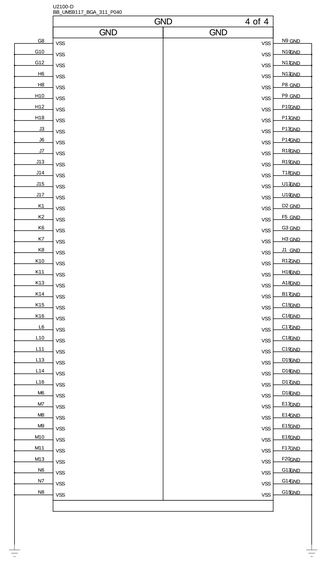

DRAWN:	DATED:	
CHECKED:	DATED:	
QUALITY CONTROL:	DATED:	
RELEASED:	DATED:	

COMPANY: **GEEMARC TELECOM**

TITLE:

CODE:	SIZE:	DRAWING NO:	REV:

SCALE: SHEET: 8 OF 12

REVISION RECORD			
LTR:	ECO NO:	APPROVED:	DATE:

MAIN MIC

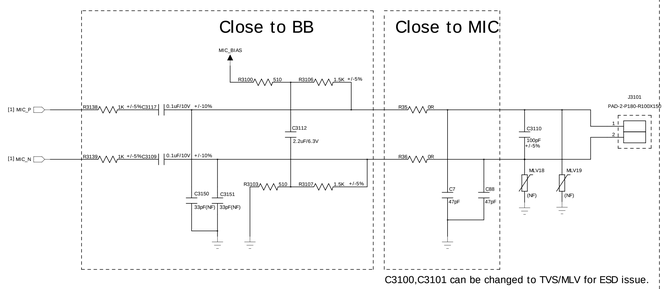

C3100,C3101 can be changed to TVS/MLV for ESD issue.

3.5mm Ear Jack

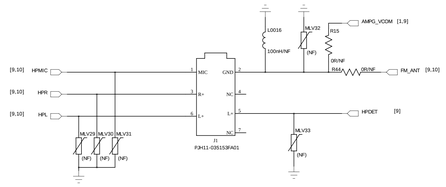

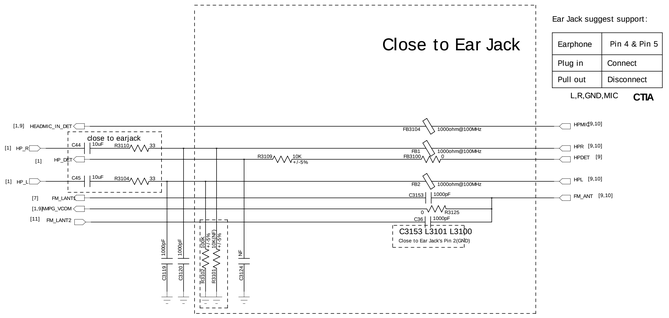

Ear Jack suggest support :

Earphone	Pin 4 & Pin 5
Plug in	Connect
Pull out	Disconnect

L,R,GND,MIC **CTIA**

R3101 R3102 for take pictures of yourself and Plug in/out Pop noise bug641913

SPEAKER

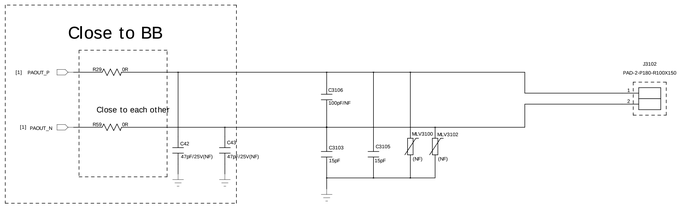

HEAD MIC

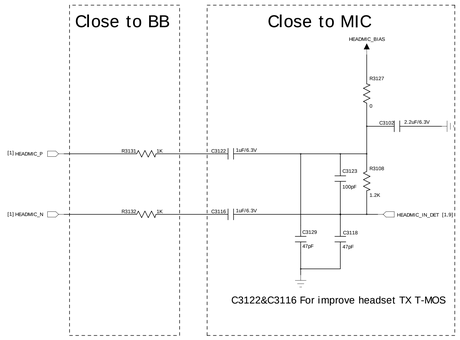

C3122&C3116 For improve headset TX T-MOS

RECEIVER

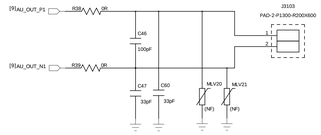

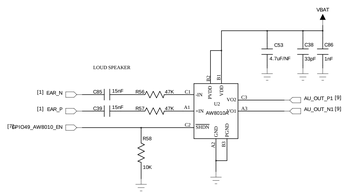

DRAWN:	DATED:	COMPANY:	GEEMARC TELECOM
CHECKED:	DATED:	TITLE:	
QUALITY CONTROL:	DATED:	CODE: / SIZE: / DRAWING NO:	REV:
RELEASED:	DATED:	SCALE:	SHEET: 9 OF 12

REVISION RECORD			
LTR:	ECO NO:	APPROVED:	DATE:

FLASH_LED

LCM

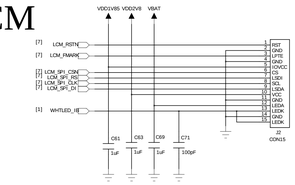

TF CARD

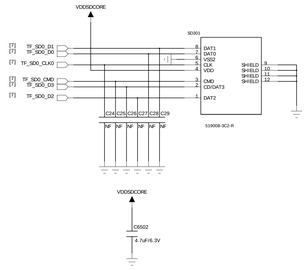

2M MAIN CAM

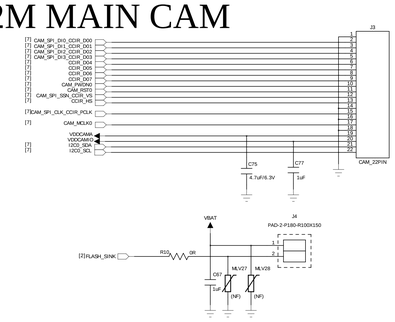

VIB

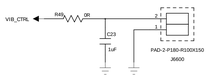

SIM0 & SIM1

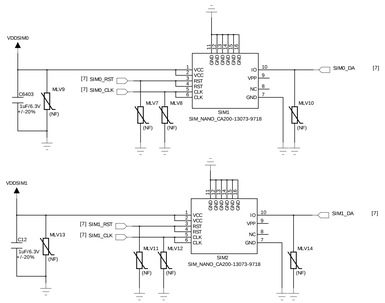

SOS

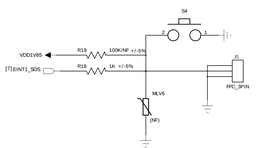

SIDE_KEY

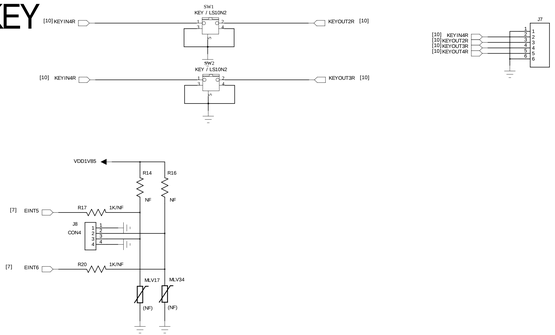

KEYPAD LED

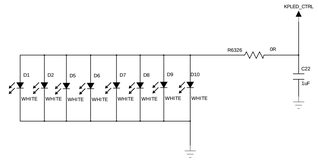

should afford 50mA current

Support 2 mode,Choose any one,and then delete 0ohm select resistor

KEYPAD

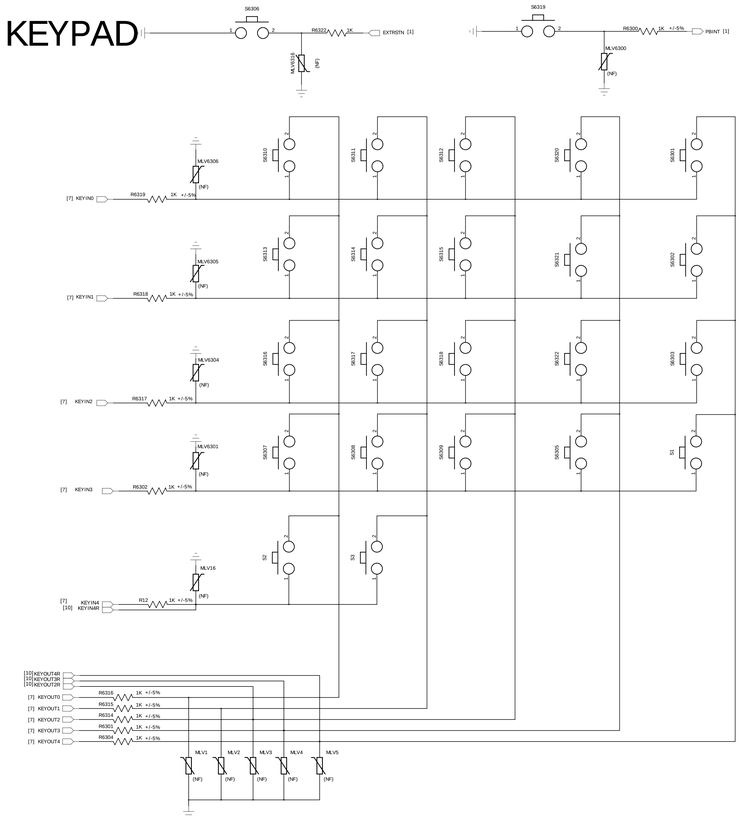

TYPE-C

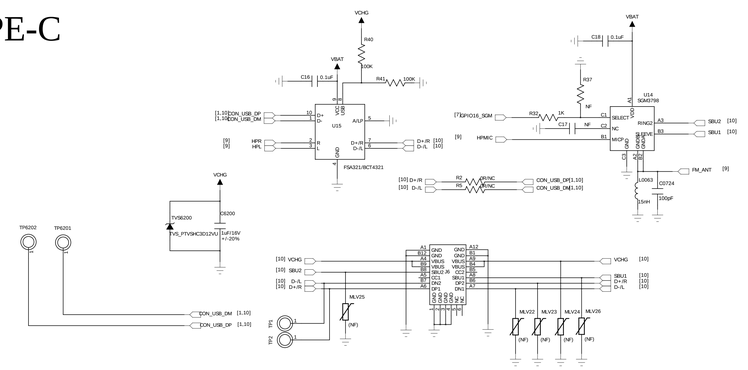

Test Points

Ball name	Signal name in boot code	Value	Descriptions	Default value
U1TXD	USB_DLOAD_EN	0 1	USB downlaoding time out: UART Downlaod	1(on1.wpu)
AUD_DAD1	ARM_BOOT_MD0	00 01	**00: Reserved** **01: Master/master, no time out)**	11(MSB mod1, LSB mod0)
AUD_DAD0	ARM_BOOT_MD1	10 11	**10: SLC SPI-NAND Flash** **11: SLC Parallel NAND Flash**	
AD_BCLK	ARM_BOOT_MD2	0 1	**USB download, if IE/T pad 3 "1IE" from PC through USB within timeout period.** **Normal Boot Flow**	1(on1.wpu)
PTEST	PTEST_FUNC_MODE	0 1	Normal mode Product Test Mode	0

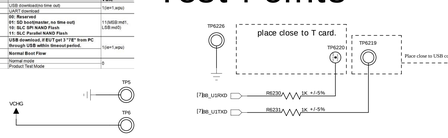

Battery temperature monitor

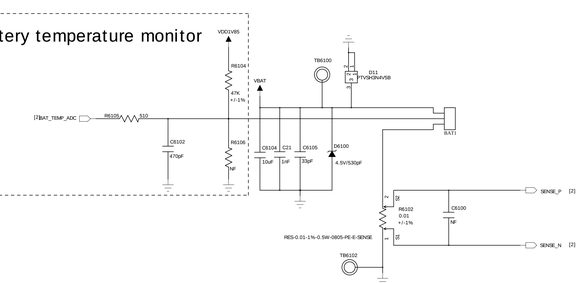

R6101 use 0402 for EOS

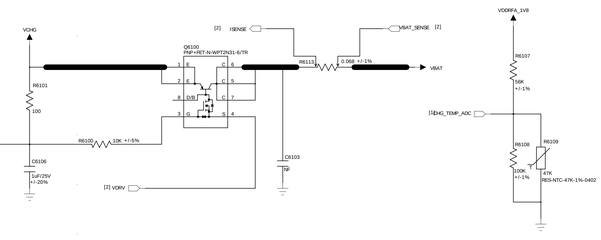

MARK POINT

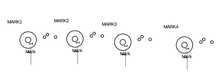

DRAWN:	DATED:	COMPANY:	GEEMARC TELECOM
CHECKED:	DATED:	TITLE:	
QUALITY CONTROL:	DATED:	CODE: / SIZE: / DRAWING NO:	REV:
RELEASED:	DATED:	SCALE:	SHEET: 10 OF 12

REVISION RECORD			
LTR:	ECO NO:	APPROVED:	DATE:

WIFI&BT&GPS ANT

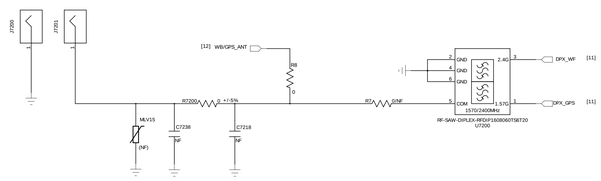

WIFI/BT SAW

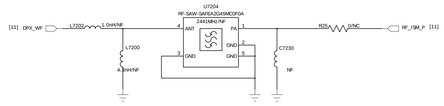

GPS SAW LNA

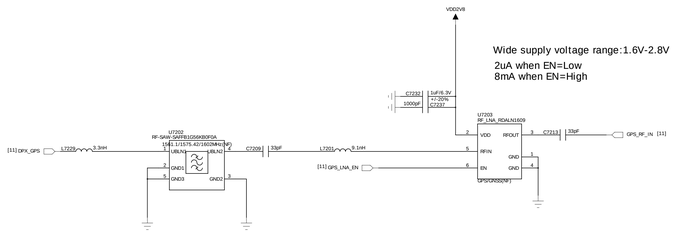

SC2332B&NA VS SC2342B&GPS

Type	U7201	R7227	R7213	R7204	R7247	FB7201	U7203	U7202
DCXO Solution for SC2332B	SC2332B	NF	NF	NF	NF	NF	NF	10K
TSX Solution for SC2342B	SC2342B	0R	0R	0R	0R	0R	SMT	SMT

Default SC2332B without GPS Backup SC2342B with GPS

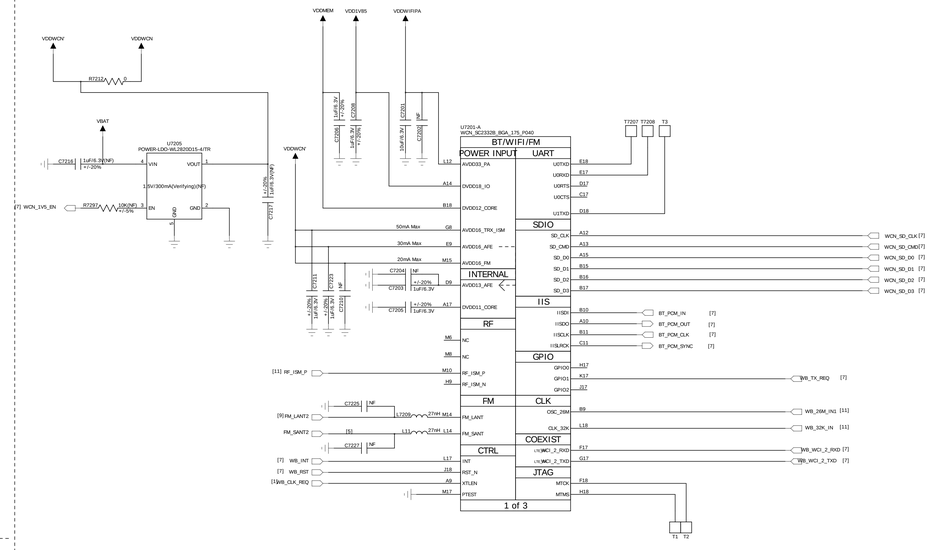

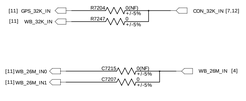

GND

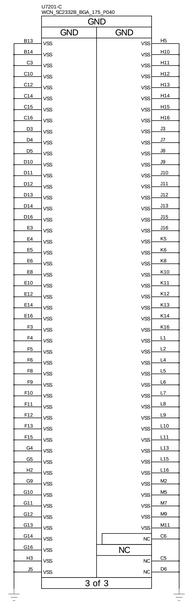

GE2 FOR BACKUP

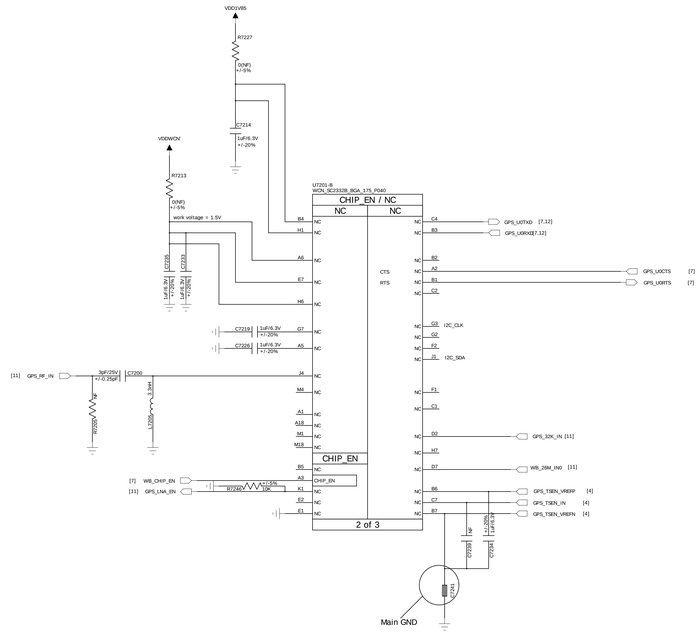

COMPANY: GEEMARC TELECOM					
TITLE:					
DRAWN:	DATED:	CODE:	SIZE:	DRAWING NO:	REV:
CHECKED:	DATED:				
QUALITY CONTROL:	DATED:				
RELEASED:	DATED:	SCALE:		SHEET: 11 OF 12	

REVISION RECORD			
LTR	ECO NO:	APPROVED:	DATE:

WIFI

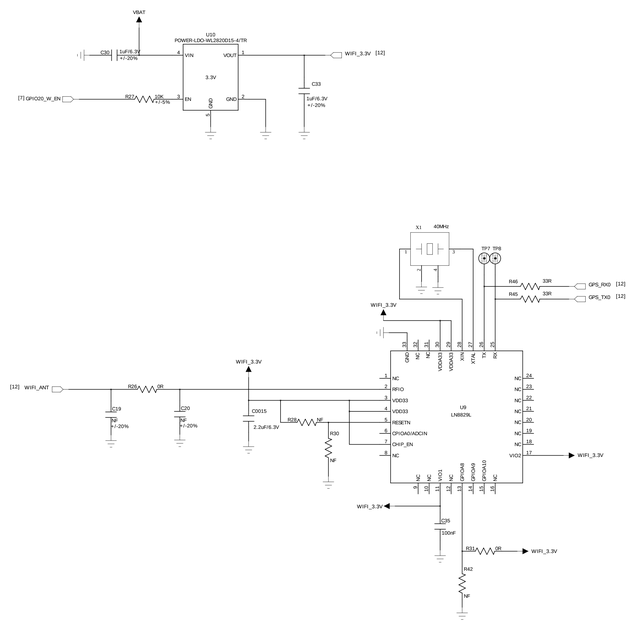

GPS

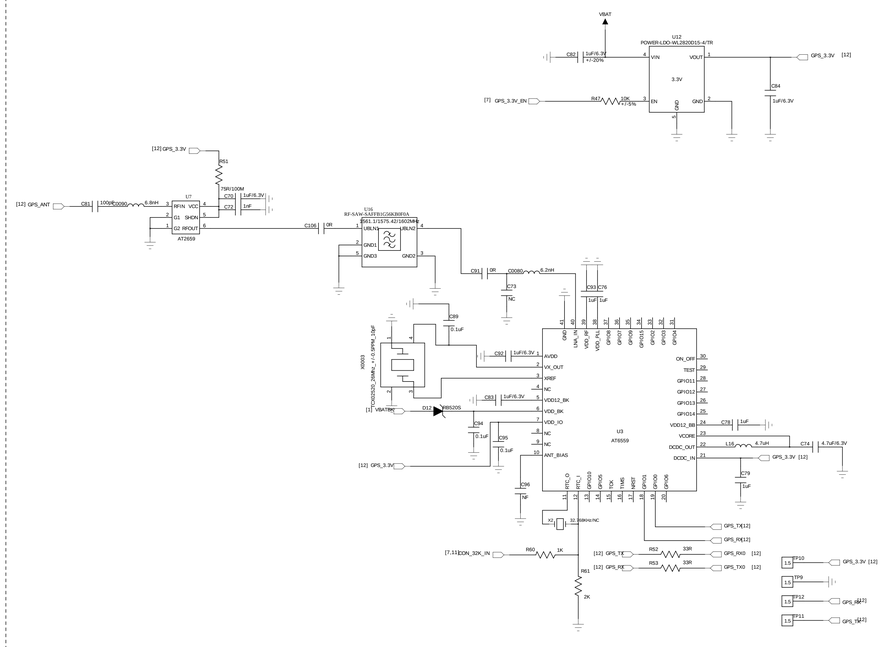

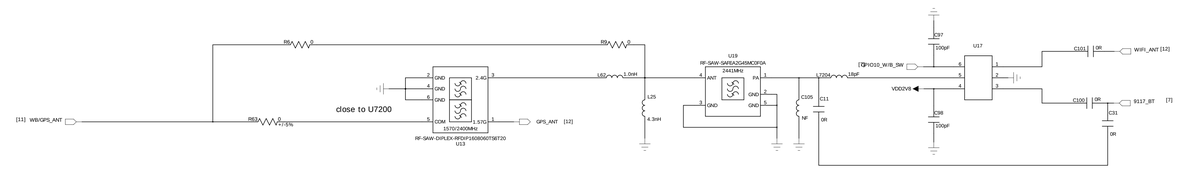

DRAWN:	DATED:
CHECKED:	DATED:
QUALITY CONTROL:	DATED:
RELEASED:	DATED:

COMPANY: **GEEMARC TELECOM**

TITLE:

CODE:	SIZE:	DRAWING NO:	REV:

SCALE: SHEET: 12 OF 12

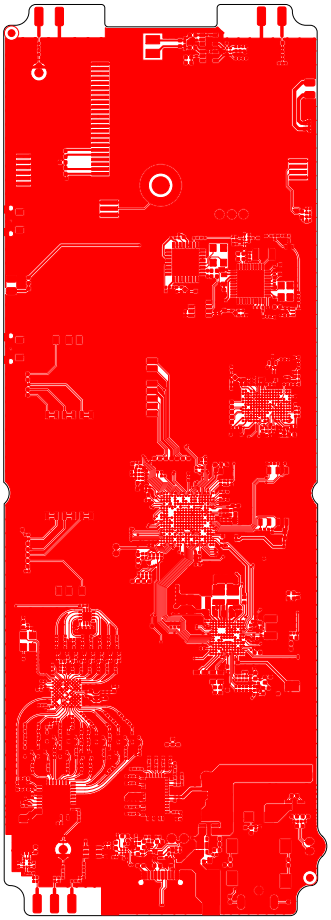

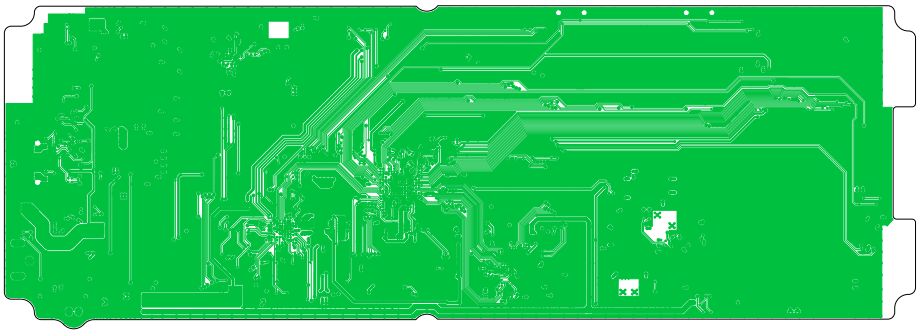

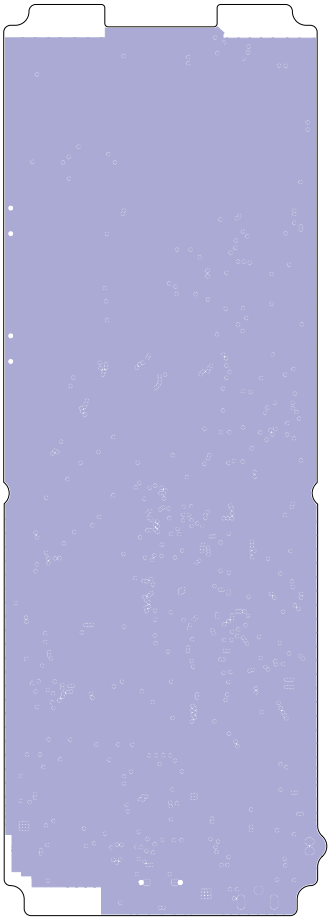

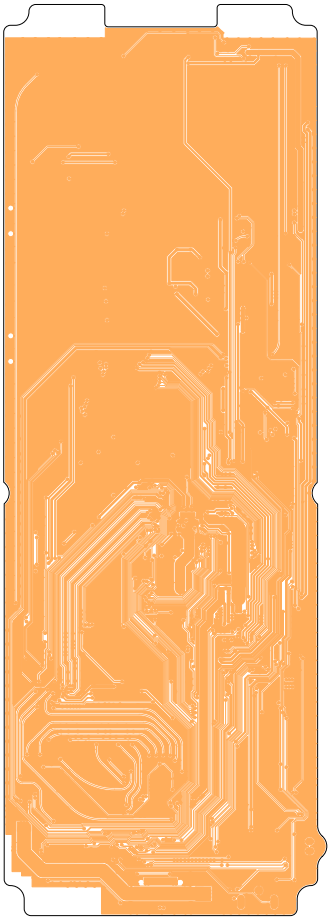

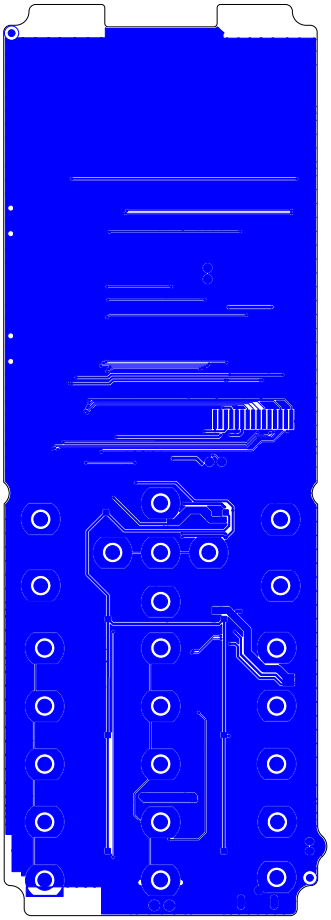

Troubleshooting

Fault analysis：

Can't turn on：

1, Upgrade the motherboard

2, Bad motherboard replacement

3, Bad battery replacement

Abnormal Display:

1, Bad display screen replacement

2, Replace the faulty FPC shaft

3, Bad motherboard replacement

No charging

1, Try with another power supply and cable.

2, Bad battery replacement

3, Bad motherboard replacement

No ringtone

1, bad speaker replacement

2, Bad motherboard replacement

No signal / Poor signal

1, Replace the Bad antenna

2, Bad motherboard replacement

Camera abnormal

1, Bad camera replacement

2, Bad motherboard replacement